Your Name: *Student Number:* *1*

Only official course summary allowed. Do all questions directly on this paper. For extra space or for rough work, use back if necessary. Time 1 hour. - Total Marks 20%.

Question 1. (6 Marks) For the circuit shown, assume $\lambda_n = 0$, $\lambda_p = 0.1$, CMRR $= \infty$. The following two measurements were done

i) $v_i = 0$ V, $v_o = -0.1$ V.

ii) $v_i = 0.02$ V, $v_o = 0.4$ V.

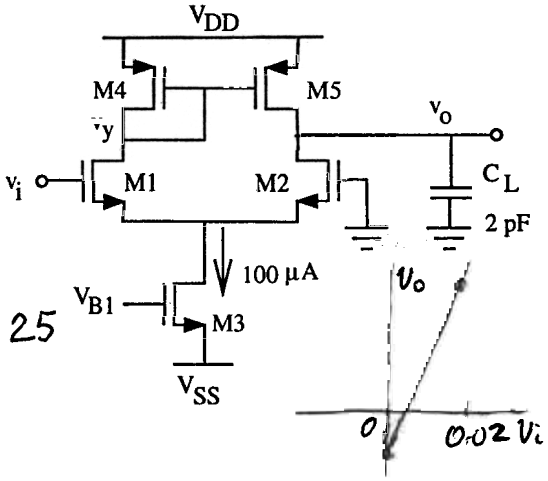

a) Find the difference-mode gain.

$$A_d = \frac{\Delta V_o}{\Delta V_i} = \frac{0.4-(-0.1)}{0.02-0} = \frac{0.5}{0.02} = 25$$

b) What is the offset referred to the input?

$$V_{o,in} = \frac{V_{off,out}}{A_d} = \frac{-0.1}{25} = -0.004 = -4mV$$

c) What is the common-mode component of the input voltage for the case ii) above?

$$V_c = \frac{V_1+V_2}{2} = \frac{0.02+0}{2} = 0.01\ V$$

d) Find the output resistance r_o of the amplifier.

$$\cancel{A_d} = r_o = \frac{1}{I(\lambda_n+\lambda_p)} = \frac{1}{50\mu A(0.+0.1)} = \frac{1}{5\mu} = 200k\Omega$$

e) Find the transconductance of M_2.

$$A_d = g_{m2} r_o, \quad g_{m2} = \frac{A_d}{r_o} = \frac{25}{200K} = 125\mu A/V$$

f) Find the UGBW in MHz.

$$\omega_u = \frac{g_m}{C} = \frac{125\mu}{2p} = 62.5\ Mrad/sec, \quad f_{UGBW} = \frac{62.5M}{2\pi} = 9.95\ MHz$$